THIS DRAWING IS THE © PROPERTY OF PRIOR SCIENTIFIC INSTRUMENTS LTD. NO PART OF IT MAY BE COPIED OR REPRODUCED WITHOUT THE EXPRESS PERMISSION OF PRIOR SCIENTIFIC INSTRUMENTS LTD.

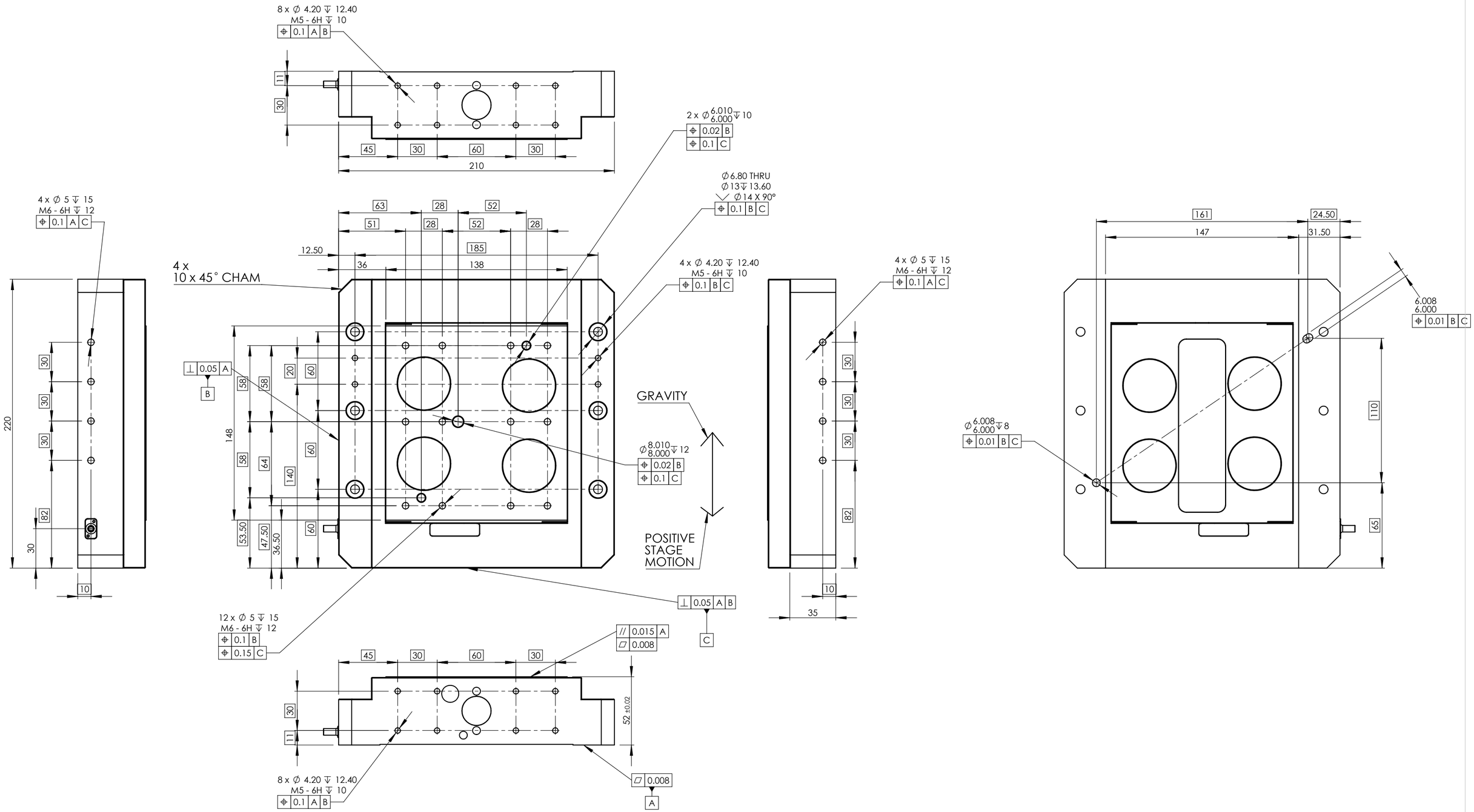

TITLE	NPS-X-60A / 80A /100A INSTALLATION DRAWING		APRVD.	D.E.	3RD ANGLE — DO NOT SCALE IF IN DOUBT ASK
DRG. No.	QG-0533-GA-100001 SHEET 1 OF 1	ISS. A	DRAWN	JC	
MATL.	ALUMINIUM & STAINLESS STEEL		SCALE	1:2	TOLERANCE UNLESS OTHERWISE STATED ±0.1mm
FINISH	NICKEL		DATE	13.09.22	
PRIOR Scientific Instruments Ltd. Fulbourn, Cambridge.					BREAK ALL SHARP EDGES

ECN	REV	CREATED	APP	DATE	DETAILS
1st Rel	A	JC	D.E.	21.09.22	1st Release