PRIOR Scientific

ES12ZETTL

Single axis stepper motor controller with TTL I/O

The ES12ZETTL is a single axis controller with encoder input, 10 TTL inputs and 5 TTL outputs, enabling precise motion control and synchronized hardware operation. It is a cost-efficient controller that delivers fast, accurate, and repeatable motion performance.

Designed for both software and hardware interfacing, it can be used with motorized Z-axis drives, rotary multi-position devices, and other stepper-driven components, while also triggering external equipment such as cameras used for image acquisition.

The ES12ZETTL adds a single high-performance stepper axis to new or existing systems, for example integrating a filter wheel into a microscope, incorporating a motorized nosepiece into an OEM system, or enabling precise focus control through a motorized Z-axis.

An optional ES12ADTTL module is available to convert the high-density TTL port into SMB connectors, offering greater flexibility in system connectivity.

The unit is available in both bench-top and OEM casework options for different applications and an open-access SDK is also provided.

Key Features

- Compact, space saving design.
- 15 programmable TTL ports with optional breakout box.
- Variable motor drive current output.
- Built-in support for linear and rotary encoders for closed-loop operation.
- Plug and play sensing of Prior devices such as HF108B and FB210.

Applications

- OEM system development
- Fluorescence microscopy
- Metrology
- Confocal and super resolution microscopy
- Industrial inspection

Dimensions

ES12ZETTL:

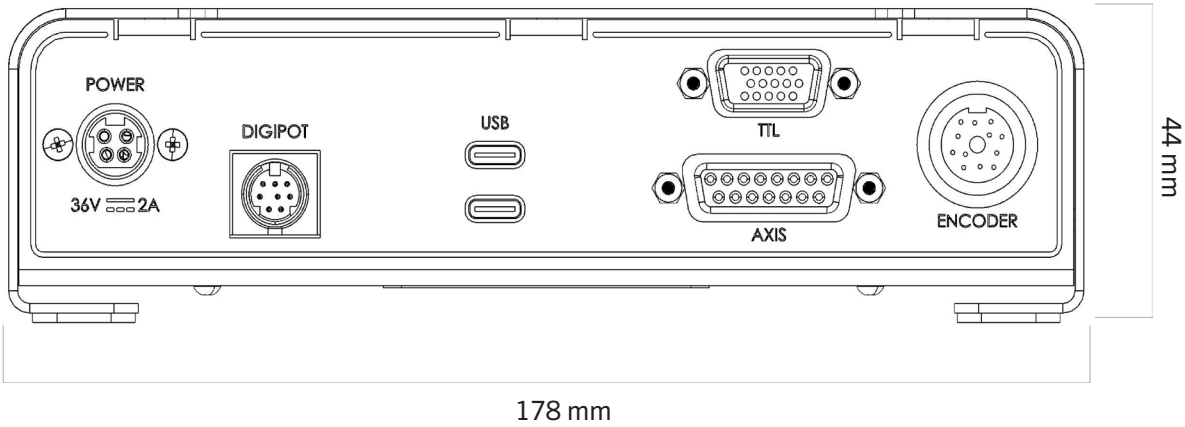

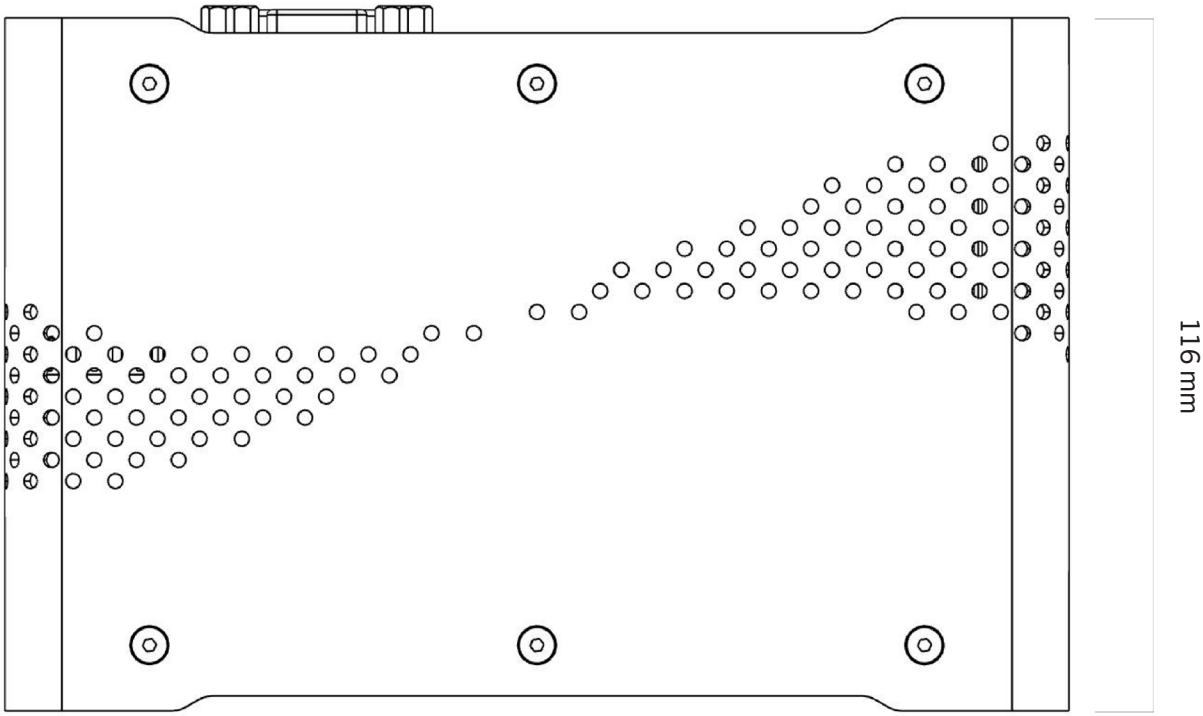

Dimensions

ES12ADTTL (optional TTL to SMB converter):

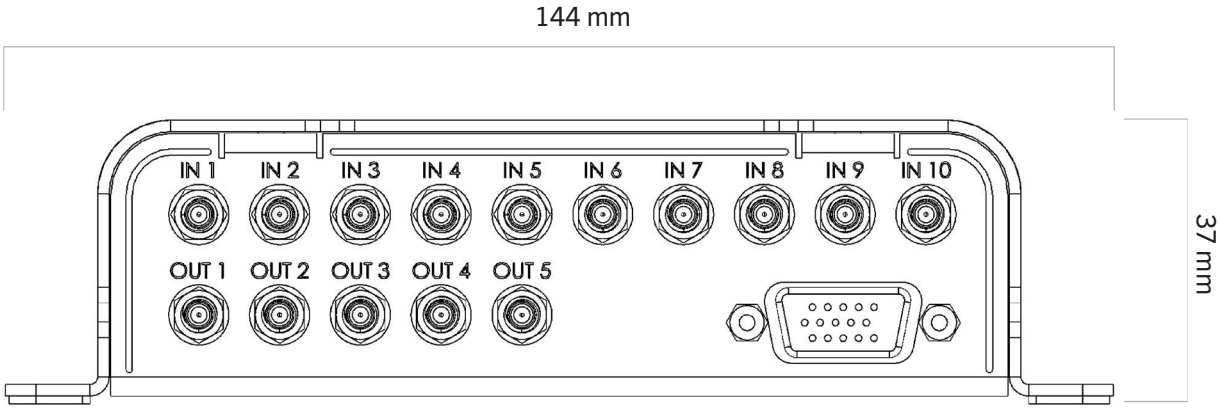

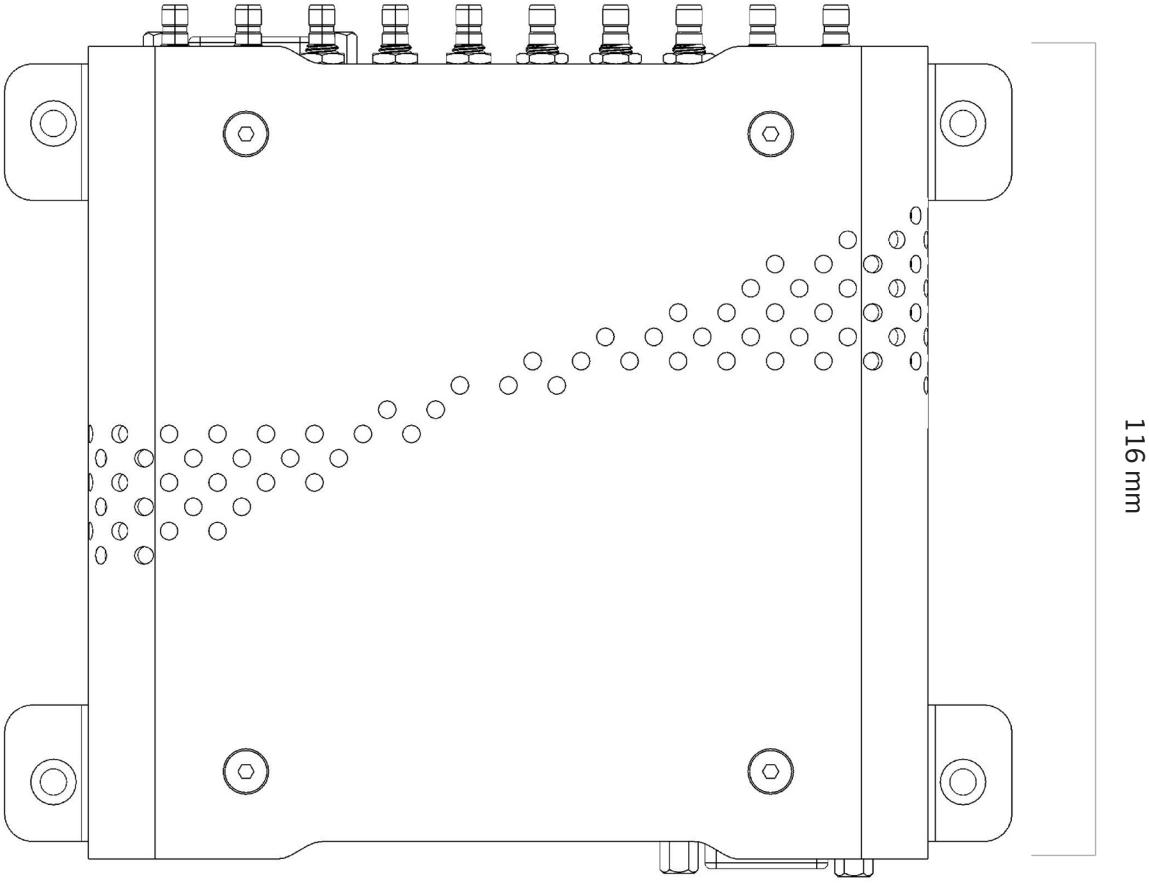

ES12ADTTL combined with ES12ZETTL

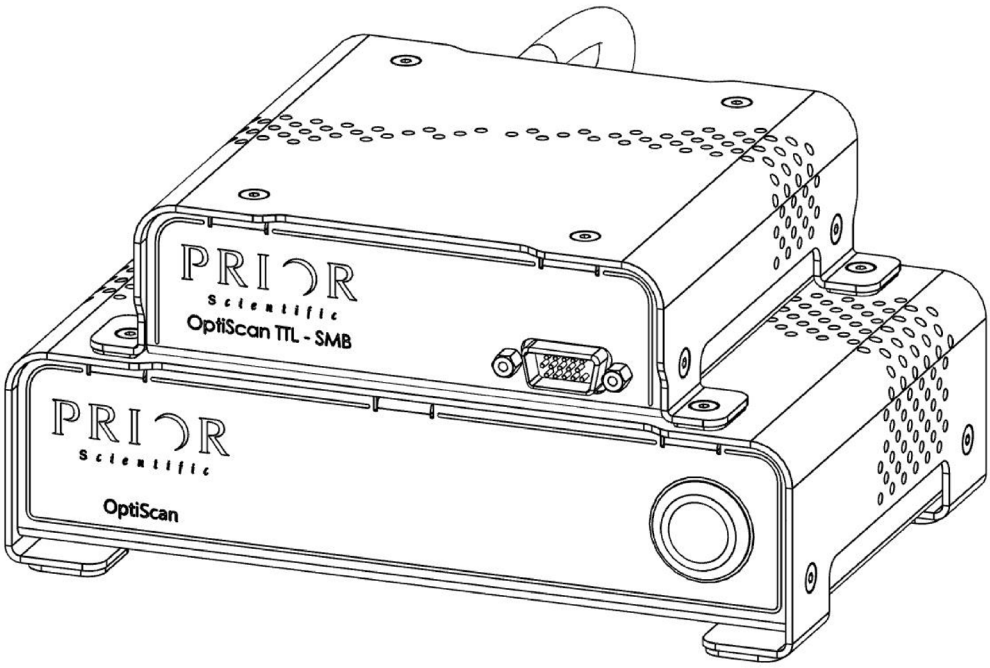

Ports

	ES12ZETTL		ES12ADTTL
Pin	**Axis**	**TTL**	**TTL**
1	A+	TTL Out 1	TTL Out 1
2	B+	TTL Out 2	TTL Out 2
3	Lmit+	TTL Out 3	TTL Out 3
4	GND	TTL Out 4	TTL Out 4
5	Sense	TTL Out 5	TTL Out 5
6	GND	TTL In 1	TTL In 1
7	Vshutter	TTL In 2	TTL In 2
8	VCC	TTL In 3	TTL In 3
9	A-	TTL In 4	TTL In 4
10	B-	TTL In 5	TTL In 5
11	Lmit-	TTL In 6	TTL In 6
12	GND	TTL In 7	TTL In 7
13	n/c	TTL In 8	TTL In 8
14	Hall	TTL In 9	TTL In 9
15	Shutter Out	TTL In 10	TTL In 10

PRIOR Scientific

Specifications

	ES12ZETTL
Power	External Power Supply Unit, 36VDC 2.0A 72W
Communication interface[1]	USB C (Virtual COM) 2.0 x2, Joystick
Communication protocol	8 bit word, 1 bit stop, no parity, no handshake
Baud rate	9600, 19200, 38400, 115400
Core supported devices	1 stepper motor device
Additional supported devices	None
Instruction set	Prior ASCII (see manual), COM DLL (legacy), C/C++ DLL
Encoder interfaces	1 stepper axis
Encoder type	AB Quadrature
TTL interface	10 TTL in, 5 TTL out
Resolution	250 microsteps per full motor step
Maximum drive current	1.5 A
Cooling	Passive, no fan required
Operating temperature	5 - 40 Celsius
Core control mass	0.5 kg
Add-on board mass[2]	0.25 kg

1. Joystick supplied separately, Z-axis mode only.
2. Optional high density D-type to SMB converter box ES12ADTLL.

Ordering Information

Part Number	Description
ES12ZETTL	Controller, for stepper motor XY stages, for 1 Z, filter wheel or other ancillary device, 10 TTL In, 5 TTL Out, 2x USB-C.
ES12ADTTL	Add-on board, 15-way D-type to SMB converter, 10 TTL in, 5 TTL out, attaches to ES12ZETTL.

UNITED KINGDOM
Prior Scientific Instruments Ltd.
Units 3-4 Fielding Industrial Estate
Wilbraham Road, Fulbourn
Cambridge, CB21 5ET
United Kingdom
Email: inquiries@prior.com
Phone: +44 (0)1223 881711

U.S.A.
Prior Scientific, Inc.
80 Reservoir Park Drive
Rockland, MA. 02370
U.S.A.
Email: info@prior.com
Phone: +1 781 878 8442

GERMANY
Prior Scientific Instruments GmbH
Maria-Pawlowna-Str. 4
D-07743, Jena, Germany
Email: jena@prior.com
Phone: +49 (0)3641 242 010

JAPAN
Kayabacho 3rd Nagaoka Bldg 10F,
2-7-10, Nihonbashi Kayabacho, Chuo-Ku,
Tokyo103-0025, Japan
Email: info-japan@prior.com
Phone: +81 (0)3 5652 8831

CHINA
Prior Scientific Instruments (Suzhou) Ltd.
Room 118, Meilihua Hemu Park
No. 393 Suhong Middle Road, Suzhou Industrial Park
Suzhou, 215000, China
Email: info-china@prior.com
Phone: +86 (0)512 6617 5866

bsi ISO 9001 Quality Management Systems CERTIFIED ISO 14001 Environmental Management CERTIFIED ISO 45001 Occupational Health and Safety Management CERTIFIED CYBER ESSENTIALS

© Prior Scientific 2026. Specifications subject to change without notice.